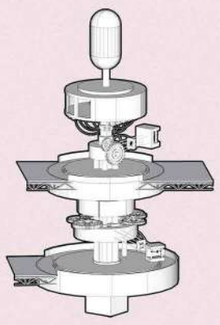

3D PRINTER

1. Filament Silo Storage
2. Transporter Pipes
3. Control Room
4. Spool Racks
5. Filament Canister
6. Reinforcement Columns
7. Aluminium Staircase
8. Printer
9. Retractable Mount
10. Scalable Node
11. Vertical Pulley Gear
12. Bridge Platform
13. Castellated Beam
14. Robotic Arms
15. Powder Coated S.S. Sheet
16. S.H.S Frame
17. Gear Axle
18. Horizontal Pulley Gear
19. Lift
20. Concrete Foundation

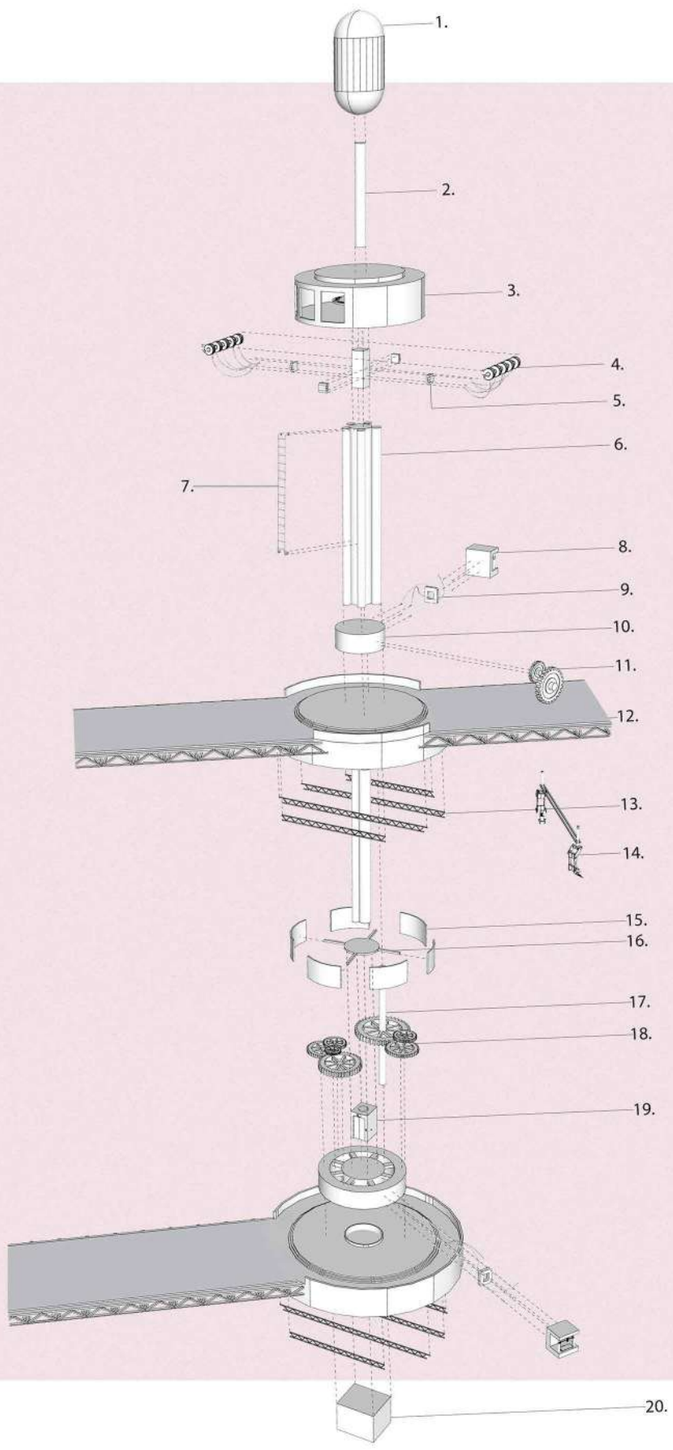

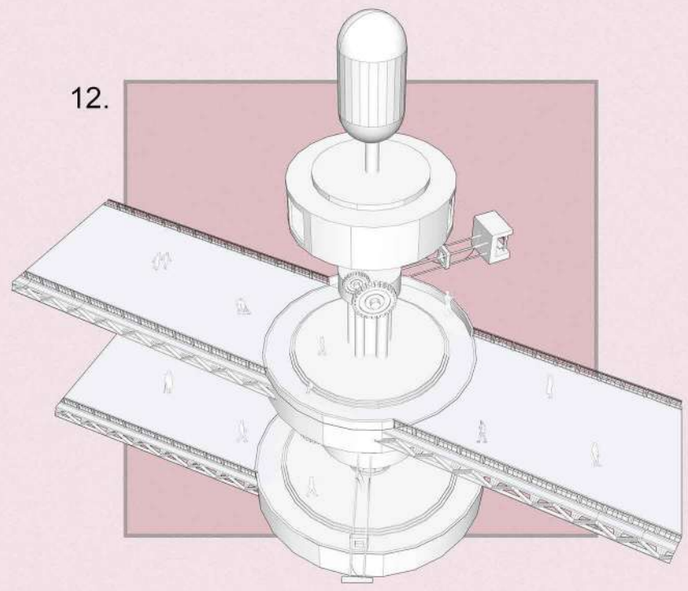

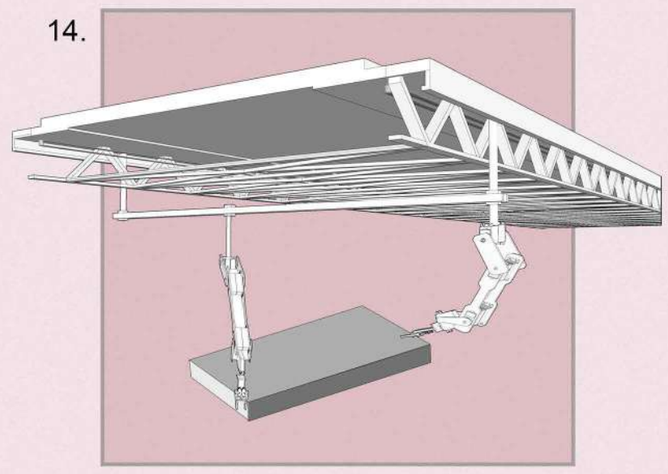

Materials collecting

process

1. Trash from the landfill will be colllected and undergo a sorting process through the conveying belt

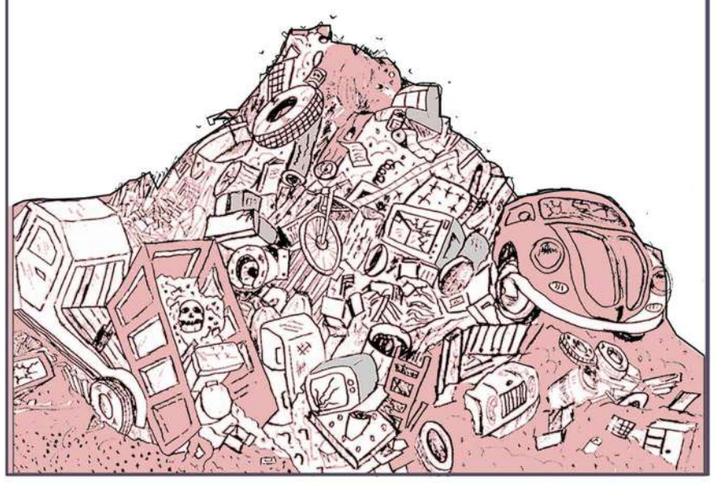

2. The first first round of sorting is done to distinguish between materials that are allowed for the 3D printing process

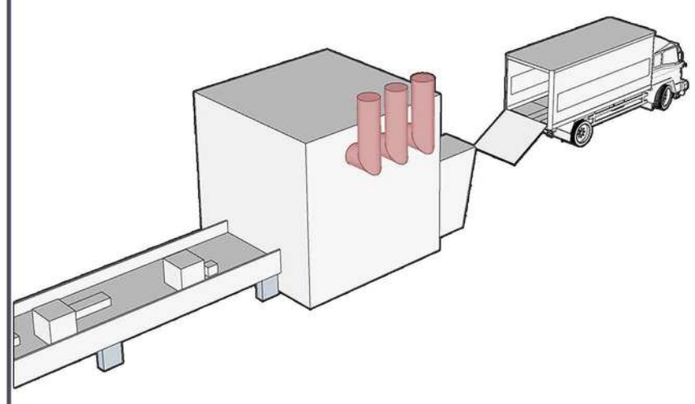

3. Another round of sorting will be done to differentiate between materials

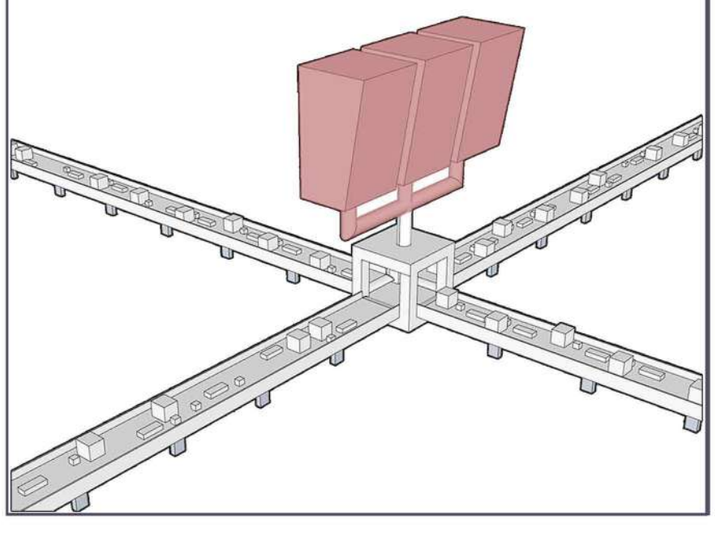
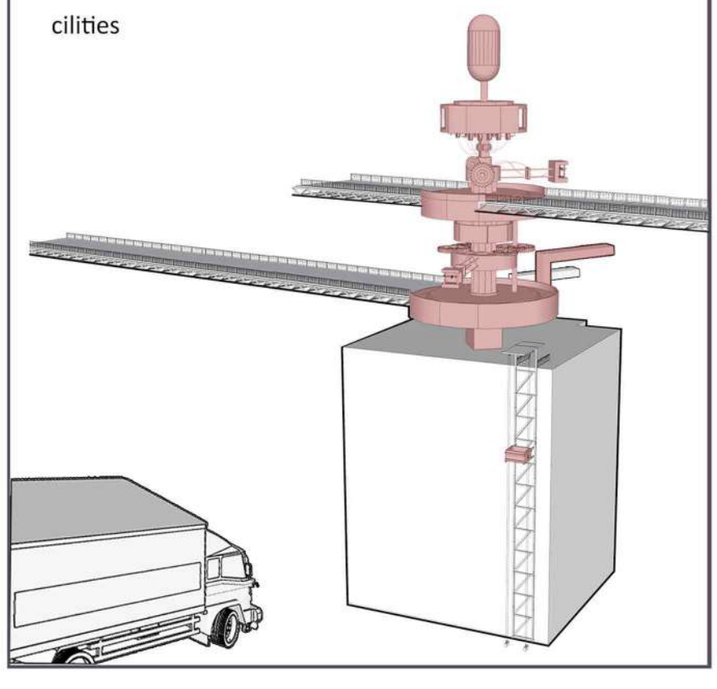
4. Sorted materials are delivered to 3D printing facilities